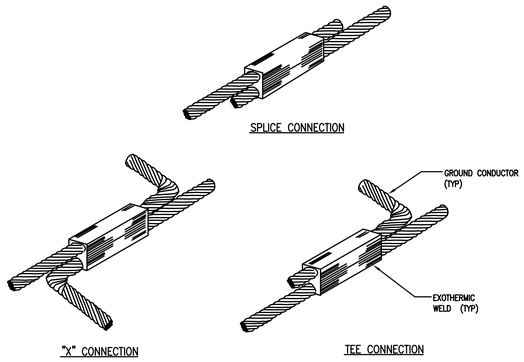

11 PARALLEL SPLICE GROUND CONNECTION

E-811 REF. SCALE: NTS

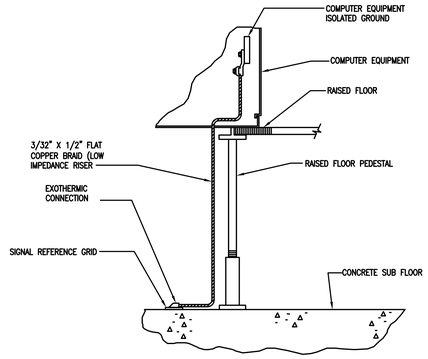

7 LOW IMPEDANCE RISER COMPUTER GROUNDING

E-811 REF. SCALE: NTS

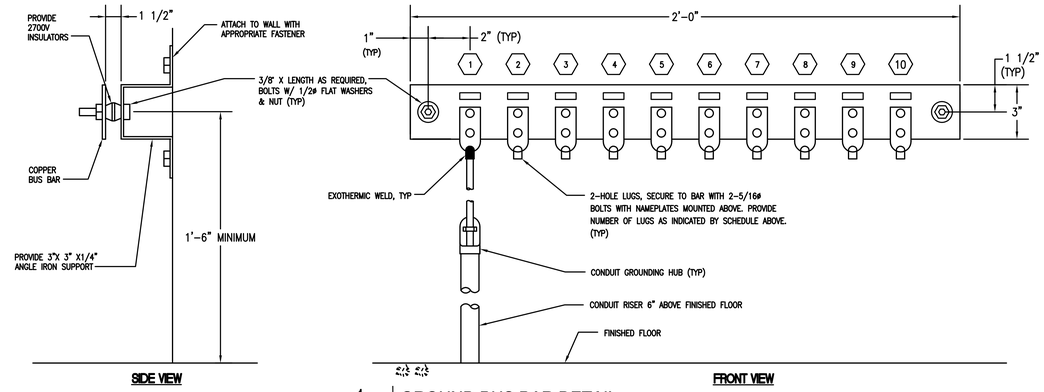

1 GROUND BUS BAR DETAIL

E-811 REF. SCALE: NTS

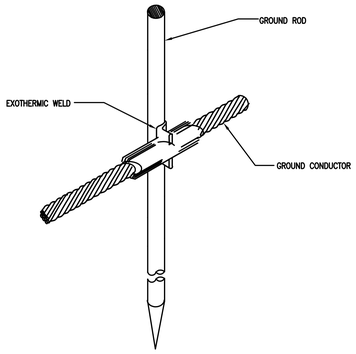

12 SINGLE CONNECTION TO GROUND ROD

E-811 REF. SCALE: NTS

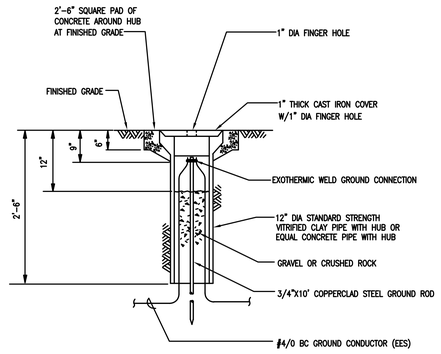

8 GROUND WELL

E-811 REF. SCALE: NTS

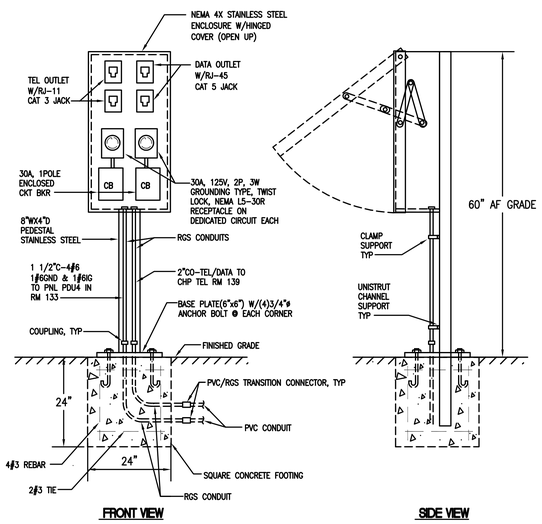

5 POWER & COMM/DATA PEDESTAL AT BIG VEHICLE PARKING SPACES DETAIL

E-811 REF. SCALE: NTS

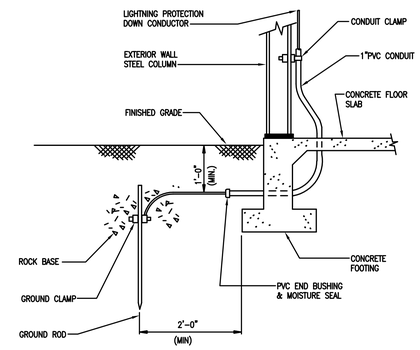

2 LIGHTNING PROTECTION DOWN CONDUCTOR TO GROUND ROD CONNECTION

E-811 REF. SCALE: NTS

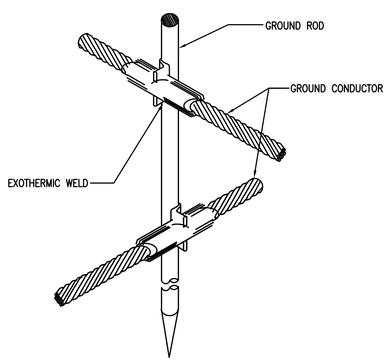

13 DOUBLE CONNECTION TO GROUND ROD

E-811 REF. SCALE: NTS

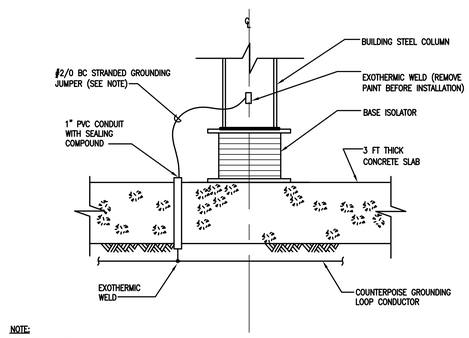

NOTE:
PROVIDE ENOUGH LENGTH TO ALLOW BUILDING MOVEMENT OF 2'-0" IN ALL DIRECTIONS

9 COLUMN GROUND CONNECTION

E-811 REF. SCALE: NTS

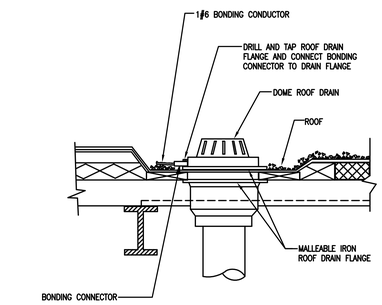

3 LIGHTNING PROTECTION - ROOF DRAIN

E-811 REF. SCALE: NTS

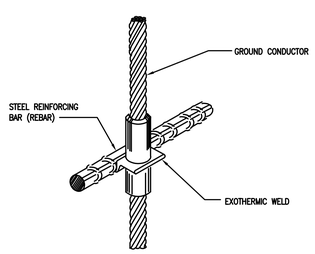

14 GROUND ROD TO REBAR

E-811 REF. SCALE: NTS

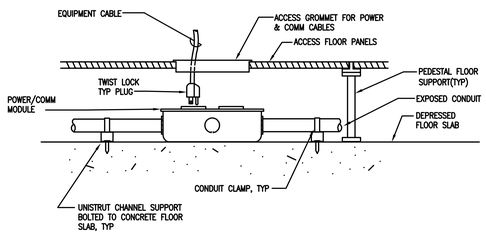

10 TYPICAL WIRING UNDER ACCESS FLOOR

E-811 REF. SCALE: NTS

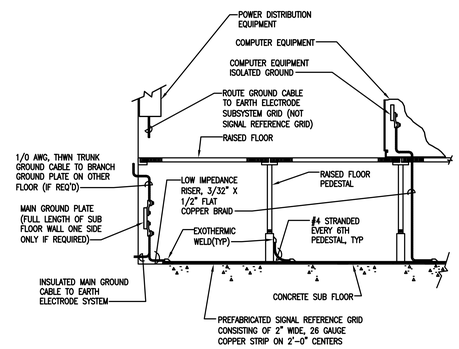

6 EQUIPOTENTIAL PLANE SIGNAL REFERENCE GRID (SRG)

E-811 REF. SCALE: NTS

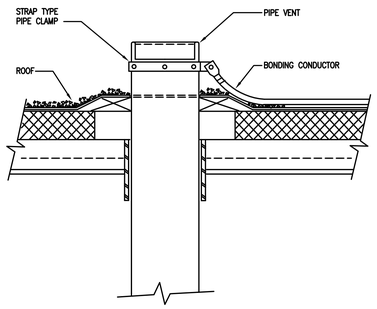

4 LIGHTNING PROTECTION ROOF VENT BONDING

E-811 REF. SCALE: NTS

PROJECT

INLAND EMPIRE TMC
Caltrans
CHP
DISTRICT 8 / INLAND DIVISION
13892 VICTORIA STREET
FONTANA, CA 92336

CLIENT

DGS
STATE OF CALIFORNIA
DEPARTMENT OF GENERAL SERVICES
REAL ESTATE SERVICES DIVISION
PROJECT MANAGEMENT BRANCH
400 R STREET, SUITE 5100
SACRAMENTO, CA 95814
PROJECT DIRECTOR : REG EDEN
TELEPHONE : (916) 376-1719

DESIGNER

DMJM H&N | AECOM
999 TOWN & COUNTRY ROAD, ORANGE CALIFORNIA 92868
T: 714-567-2400 F: 714-543-0955 www.dmjm.com

CONSULTANTS

STATUS

100% CONSTRUCTION DOCUMENTS SEPT. 7, 2007

ISSUE

MARK	DATE	DESCRIPTION

PROJECT NO: 60004333.4000
DRAWN BY: L. DICKENS
CHECKED BY:

KEY PLAN

SHEET TITLE

DETAILS

E-811

DWG: Q:\Caltrans\ETMC\500 CAD\E\Sheet\E-811.dwg User: jimenezv
DATE: Sep 05, 2007 - 8:59:59 am Images:
Xrefs: XBDR