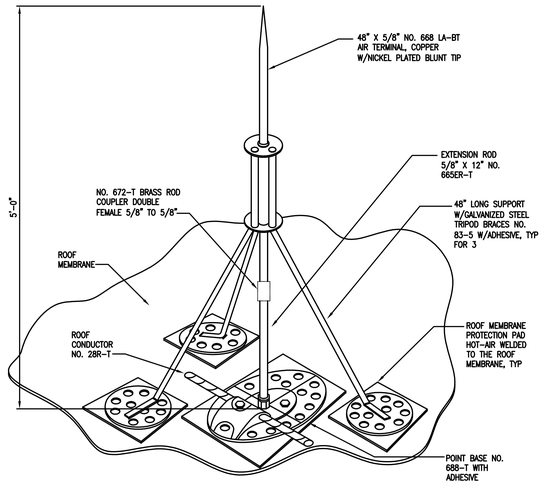

NOTE:

1. ALL PART NO. ARE FROM "THOMPSON LIGHTNING PROTECTION, INC". OTHER APPROVED EQUAL PRODUCTS SHALL BE ACCEPTABLE.

11 MIDDLE ROOF AIR TERMINAL

E-810 REF. SCALE: NTS

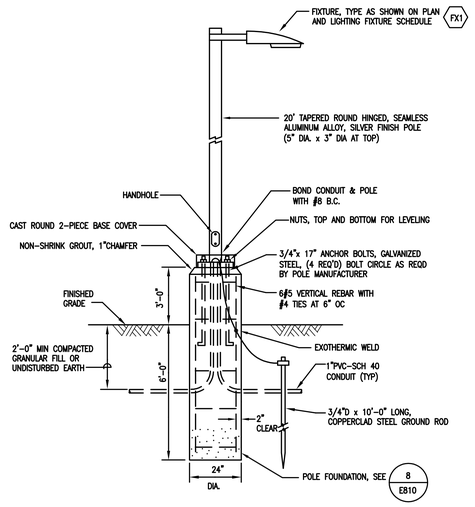

NOTES:

1. USE STAINLESS STEEL NUTS AND LOCKWASHERS.
2. CONDUITS SHALL BE STUBBED UP TO WITHIN 6" OF THE POLE HANDHOLE.
3. FOR PROPER ORIENTATION OF POLE, COORDINATE WITH SITE PLAN.
4. ALL METAL PARTS SHALL BE BONDED TO GROUND.
5. GROUNDING LUG SHALL BE LOCATED OPPOSITE OF HANDHOLE.

9 PARKING LOT LIGHTING POLE AND LUMINAIRE

E-810 REF. SCALE: NTS

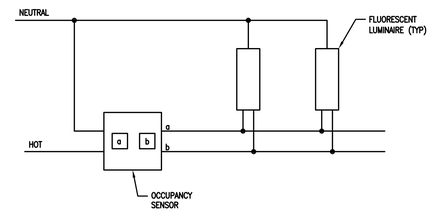

5 WALL MTD OCCUPANCY SENSOR WIRING DIAGRAM

E-810 REF. SCALE: NTS

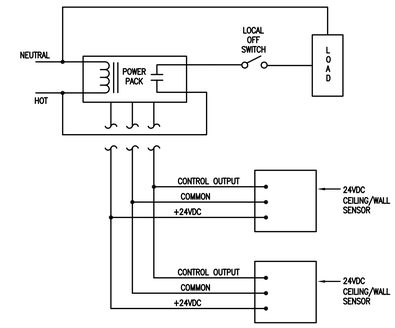

1 MULTIPLE OCCUPANCY SENSOR USING ONE POWER PACK

E-810 REF. SCALE: NTS

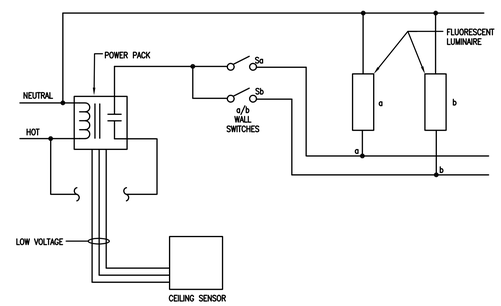

6 CEILING OCCUPANCY SENSOR WIRING DIAGRAM

E-810 REF. SCALE: NTS

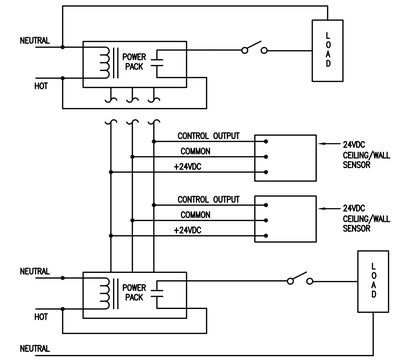

2 MULTIPLE OCCUPANCY SENSOR CONTROLLING TWO CIRCUITS

E-810 REF. SCALE: NTS

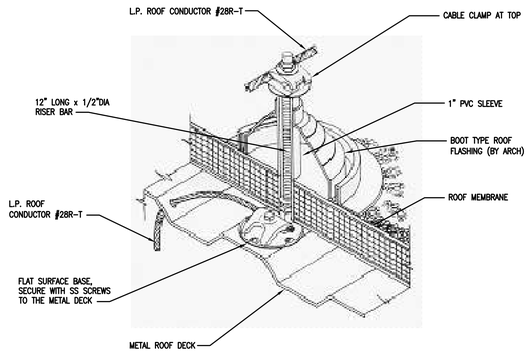

12 L.P. DOWN CONDUCTOR #28R-T THROUGH ROOF DOWNLEAD CONNECTOR ASSEMBLY

E-810 REF. SCALE: NTS

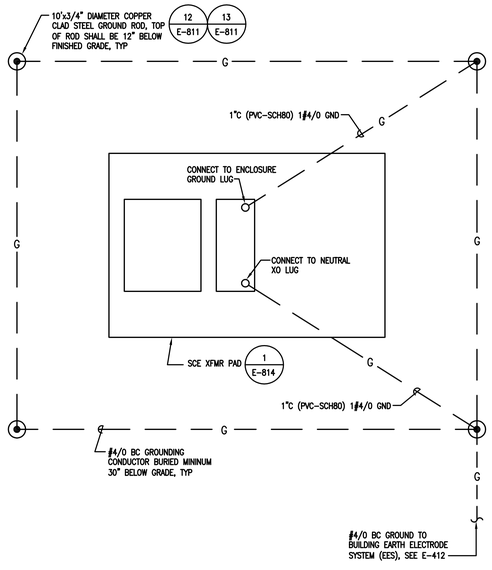

10 "SCE" TRANSFORMER GROUNDING DETAIL

E-810 REF. SCALE: NTS

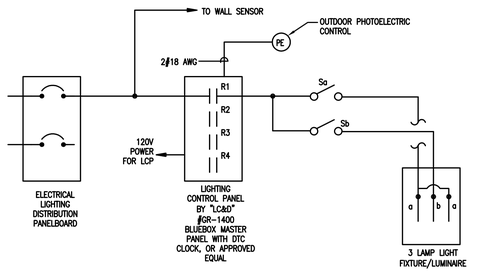

7 TYPICAL LIGHTING CONTROL PANEL, RELAY AND PHOTOSENSOR CONTROL WIRING DIAGRAM

E-810 REF. SCALE: NTS

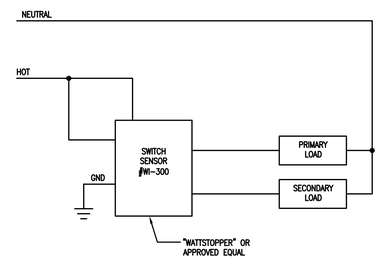

3 AUTOMATIC WALL MOUNTED SWITCH WITH BI-LEVEL CIRCUIT CONTROL

E-810 REF. SCALE: NTS

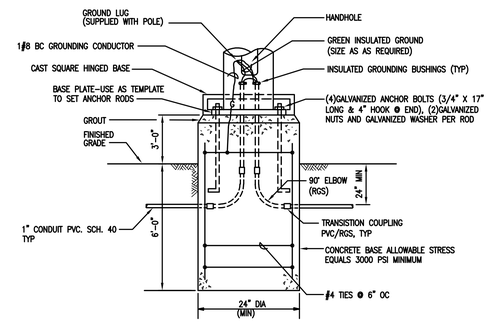

8 LIGHT POLE FOUNDATION

E-810 REF. SCALE: NTS

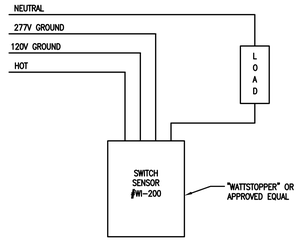

4 AUTOMATIC WALL MOUNTED SWITCH FOR SINGLE LEVEL LIGHTING

E-810 REF. SCALE: NTS

PROJECT

INLAND EMPIRE TMC
Caltrans
CHP
DISTRICT 8 / INLAND DIVISION

13892 VICTORIA STREET
FONTANA, CA 92336

CLIENT

DGS

STATE OF CALIFORNIA
DEPARTMENT OF GENERAL SERVICES
REAL ESTATE SERVICES DIVISION
PROJECT MANAGEMENT BRANCH
400 R STREET, SUITE 5100
SACRAMENTO, CA 95814
PROJECT DIRECTOR : REG EDEN
TELEPHONE : (916) 376-1719

DESIGNER

DMJM H&N | AECOM

999 TOWN & COUNTRY ROAD, ORANGE CALIFORNIA 92868
T: 714-567-2400 F: 714-543-0955 www.dmjm.com

CONSULTANTS

STATUS

100% CONSTRUCTION DOCUMENTS SEPT. 7, 2007

ISSUE

MARK	DATE	DESCRIPTION

PROJECT NO:	60004333.4000
DRAWN BY:	L. DICKENS
CHECKED BY:	

KEY PLAN

SHEET TITLE

DETAILS

E-810

DWG: Q:\Caltrans\ETMC\500 CAD\E\Sheet\E-810.dwg User: jimenezv
DATE: Sep 05, 2007 - 9:00:06 am Images:"DET1.TIF"LPCONNECTOR.JPG"
Xrefs: "XBDR" "XETMC-ARP02