8'-0" x 10'-0" EDISON TRANSFORMER PAD W/4'-0" x 7'-0" ENCLOSURE x 42" DEEP

NOTES:

- TRANSFORMER PAD AND ENCLOSURE ARE DESIGNED FOR PARKWAY LOADING PER CALCS. #31654 USING 5,500 PSI. COMPRESSIVE STRENGTH CONCRETE.
- COVER IS DESIGNED FOR PARKWAY LOADING.
- VAULT TO BE PLACED ON A MIN. 6" BASE OF CRUSHER RUN FOR EVEN LOAD DISTRIBUTION AND EASE OF INSTALLATION.
- MINIMUM EXCAVATION SIZE: 5'-6" x 8'-6" x DEPTH
- TOTAL WEIGHT OF ASSEMBLY AS SHOWN IS 11,348 Lbs.

1. SB47-B42-11, 42" BOTTOM SECTION, WT. 6,400 Lbs.
2. PD96120-T6-11, 6" TRANSFORMER PAD, WT. 4,900 Lbs.
3. RPM "EDISON" 1 PIECE COVER W/(6) 1/2" x 2 1/2" P.H.S.S. BOLT W/CAPTIVE WASHERS (2) LIFT EYES, WT. 109 Lbs.
4. 16" x 20" KNOCKOUT x 3 1/2" DEEP, DRAFT AS FOLLOWS: T=2", S1= 3 1/2", S2=3 1/2", B=2", BOTTOM SECTION (8) SHELL MTD.
5. 1 5/8" x 1 5/8" UNISTRUT x 18" LONG (55-21-018), TRANSFORMER PAD (2) TABLE MTD.
6. 1/2" P-35-T INSERT W/CLEAN-OUT HOLE, TRANSFORMER PAD (6) FRAME MTD.
7. 1" GALVANIZED COIL THREAD INSERT, BOTTOM SECTION (4) CORE MTD.

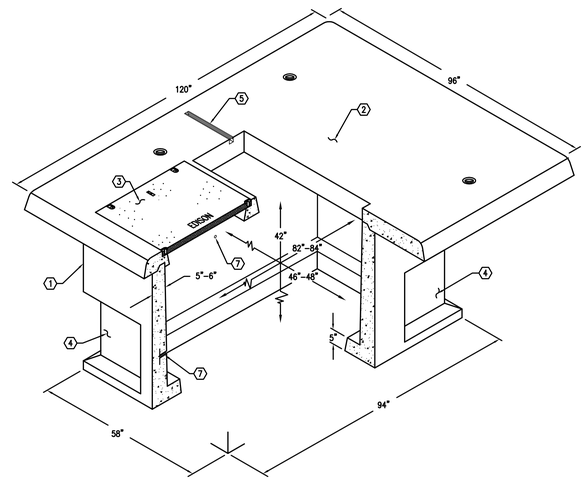

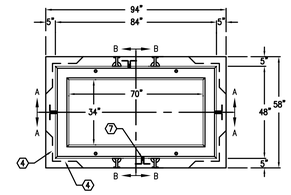

PLAN VIEW W/O TRANSFORMER PAD

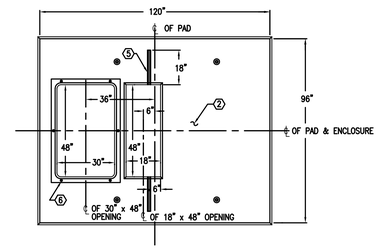

PLAN VIEW OF TRANSFORMER PAD

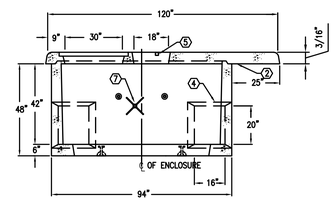

SECTION A-A

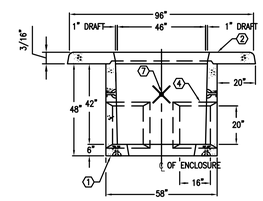

SECTION B-B

1 JENSEN PRECAST #K810-SB42-11 SCE XFMR PAD AND SLAB BOX DETAIL

E-814 REF. SCALE: NTS

PROJECT

INLAND EMPIRE TMC
Caltrans
CHP
DISTRICT 8 / INLAND DIVISION
13892 VICTORIA STREET
FONTANA, CA 92336

CLIENT

DGS

STATE OF CALIFORNIA
DEPARTMENT OF GENERAL SERVICES
REAL ESTATE SERVICES DIVISION
PROJECT MANAGEMENT BRANCH
400 R STREET, SUITE 5100
SACRAMENTO, CA 95814
PROJECT DIRECTOR : REG EDEN
TELEPHONE : (916) 376-1719

DESIGNER

DMJM H&N | AECOM

999 TOWN & COUNTRY ROAD, ORANGE CALIFORNIA 92868
T: 714-567-2400 F: 714-543-0955 www.dmjm.com

CONSULTANTS

STATUS

100% CONSTRUCTION DOCUMENTS SEPT. 7, 2007

ISSUE

MARK	DATE	DESCRIPTION

PROJECT NO:	60004333.4000
DRAWN BY:	L. DICKENS
CHECKED BY:	C. DAVIES

KEY PLAN

SHEET TITLE

DETAILS

E-814

DWG: Q:\Caltrans\ETMC\500 CAD\E\Sheet\E-814.dwg User: jimenezv
DATE: Sep 05, 2007 - 9:03:52 am Images:
Xrefs: *XBDR